5

79 655155 PAX

BENCH RACK MOUNTING POWER SUPPLIES

0279-655322

Instruction Manual

ADVANCE

FARNELL ADVANCE.

BRM 40-50

0978 - 821149

5

081 500 1000

FARNELL

0279 655155

FAX 0279-655322

BENCH RACK MOUNTING POWER SUPPLIES

Instruction Manual

ADVANCE
INDUSTRIAL
ELECTRONICS (Sales Office)

Raynham Road Bishop's Stortford Herts. England
Telephone Bishop's Stortford (0279) 55155
Telex 81510
Telegrams Advancelec Stor

Division of ADVANCE ELECTRONICS LIMITED

CONTENTS

SECTION	1	**Introduction**	5
SECTION	2	**Specification**	6
SECTION	3	**Operation**	9
	3.1	Dimensions and Weights	9
	3.2	AC Supply and Preliminary Checks	13
	3.3	Resetting the output voltage	14
	3.4	Resetting the output current	14
	3.5	Resetting the overvoltage level	14
	3.6	Remote Programming	15
	3.7	Parallel Operation	15
	3.8	Series Operation	16
	3.9	Four Terminal Sensing	17
SECTION	4	**Circuit Description**	19
	4.1	General	19
	4.2	Mains Supply	20
	4.3	Rectification and Pre-Regulation	20
	4.4	Series Regulator	20
	4.5	Bridge Reference Source	21
	4.6	Voltage Control Bridge	21
	4.7	Voltage Control	21
	4.8	Current Control Bridge	21
	4.9	Current Control	22
	4.10	Mode of Operation	22
	4.11	Overvoltage Protection	23
	4.12	Thermal and Mains Cut-out	23
	4.13	External Programming	23
SECTION	5	**Maintenance**	24
	5.1	Access to components	24
	5.2	Replacement of Printed Circuit Boards	24
	5.3	Fault Finding	24
SECTION	6	**Component Lists and Illustrations**	27
SECTION	7	**Guarantee and Service Facilities**	35

continued overleaf

CONTENTS (cont.)

TABLES

Table 1	Output Voltages and Currents	5
Table 2	Unit Deratings	8
Table 3	Overall dimensions and weights	9
Table 4	Fuse Rating	13
Table 5	Permissible lead lengths	18
Table 6	Fault Finding	25

ILLUSTRATIONS

Fig. 1	*Connection diagrams*	*12*
Fig. 2	*Parallel Operation*	*16*
Fig. 3	*Series Operation*	*16*
Fig. 4	*Four Terminal Sensing*	*17*
Fig. 5	*Functional Circuit Diagram*	*19*
Fig. 6	*Mode of Operation*	*22*
Fig. 7	*1A to 10A Circuit Diagram + Component Schedule*	*27*
Fig. 8	*30 Amp Circuit and Component Schedule*	*29*
Fig. 9	*50 Amp Circuit and Component Schedule*	*31*
Fig. 10	*Printed Circuit Board Component Schedule*	*32*

The BRM power units are a new range of Bench-Rack Mounting, fully stabilised, programmable d.c. supplies. There are six units in the range, and they supply 0-40 volts at current levels of 5, 10, 30 and 50 Amps, 0-60 volts at 1 and 3 amps.

The units are designed to fit into the 19" rack system, or by the addition of feet, they can be used as bench supplies for laboratory use. The units are built to the standard 5¼" height with the exception of the 50 Amp unit which conforms to the 7" standard. The 1A to 10 Amp models are ½ rack width, and when they are to be used in racks, a mounting tray can be supplied which holds two ½ rack units. With all these units, slides can be supplied to enable ease of fitting into the rack and accessibility.

The power supplies are designed for convection cooling, and supply full output power at 40°C, and with derating will operate up to 70°C ambient. Various front panel options are available to suit individual requirements. Options vary from thumbwheel selection of output voltage, to coarse and fine controls backed up by a voltmeter. The output current is set by a single or multiturn potentiometer, depending on unit, with vernier dial calibration on multi-turn controls. Visual indication is given by an ammeter. Overvoltage on all units is set using a multi-turn potentiometer with a vernier dial.

OUTPUT VOLTAGES AND CURRENTS

Table 1 Output Voltages and Currents

	Output Voltage	Output Current	Output Watts	Input Watts	P.F.
BRM 60-01	60	1	60	90	0.62
BRM 60-03	60	3	180	263	0.62
BRM 40-05	40	5	200	285	0.62
BRM 40-10	40	10	400	570	0.62
BRM 40-30	40	30	1200	1630	0.63
BRM 40-50	40	50	2000	2750	0.62

At nominal input volts

Input Voltage: 110, 115, 120, 125, 220, 230, 240, 250 ±10% (By tap change) 220, 240 only on BRM 40-50

Frequency 48–65 Hz.

Voltage Limit Setting: *Standard:* 3 decade setting of voltage in 10V, 1V and 0.1V steps. An additional 0.1 volt continuous control at any point of the range with switched "cal" position is fitted.

'A' Version: The digital switch is replaced by a dual concentric potentiometer with voltmeter indication of output voltage.

Calibration Accuracy: *Standard:* ±0.5% or 20mV (whichever is greater) at 25°C.

Current Limit Setting: *Standard:* A continuous control over the current range of 50mS to –100% of full load current, with a vernier calibration on the full rack units and a single turn control with meter indication on all ½ rack units.

'A' Version: The current control is replaced by a dual concentric potentiometer with ammeter indication of output current.

Meter Accuracy: ±2% F.S.D.

Voltage Mode: *Line Regulation* Less than ±(0.001% + 30μV) for ±10% A.C. line variation.

Load Regulation Less than 0.01% + 1mV for zero to full load current change.

Ripple 500μV RMS

Temperature Coefficient: *Standard:* 0.01% per °C

'A' Version: 0.02% per °C

Output Impedance: 0.15Ω at 100KHz measured at the output terminals.

Current Mode: *Line Regulation:*
Less than ±(0.02% + 200μA) for ±10% A.C. line variation, in the range of 50mA to 100% of full rated current.

Load Regulation:
Less than 0.1% + 2mA for zero to full load voltage change.

Temperature Coefficient:
0.1% (of maximum rated output current) per °C.

Protection

Over-Current:
Constant current overload protection which is variable from 50mA to 100% of output current.

Overvoltage:–
Models up to 10 Amps: The overvoltage level is continuously variable down to 3 volts, by a multi-turn control. Operation is by a high speed thyristor connected as a crowbar across the dc output.

30 and 50 Amp models: The overvoltage level is continuously variable down to 3 volts by a multi-turn control. Operation is by a high speed thyristor connected as a crowbar across the dc output. On these models, operation of the overvoltage circuit operates the main circuit breaker.

Thermal Protection

Models up to 10 Amps: The series transistors are protected by a thermal cut-out which operates in the A.C. input to the main transformer.

30 and 50 Amp Models: The series transistors are protected by a thermal cut-out which operates a relay trip coil in the main circuit breaker, thus removing the A.C. input to the main transformer.

Overshoot: No overshoot on switch ON or OFF or power failure.

Remote Control Facilities: *Voltage Programming:* Programming resistance 1000Ω/V ± ¼%.
Current Programming: Programming resistance 1000Ω for 100% output current ± 2%

Overvoltage Programming: Programming resistance 500Ω/V ± 1%.

Mode Indication: By indicator lamps on the front panel, and auxiliary c/o contacts available on rear terminal block.

Remote Sensing: Provision is made on rear terminal block.

Series and Parallel Operation: Provision is made on rear terminal block.

Operating Temperature: 0 to 70°C with derating. See table 2 for unit deratings.

Output Connections: Input and output isolated, heavy duty output terminals. Mains covers will be fitted.

Insulation: Floating output must not exceed ±250 volts DC from ground. Input tested 500V DC live to ground, and live to output greater than 100mΩ

UNIT DE-RATINGS

Table 2 Unit Deratings

	40°C	50°C	60°C	70°C
BRM 60-01	1A	0.9A	0.8A	0.72A
BRM 60-03	3A	2.7A	2.4A	2.2A
BRM 40-05	5A	4.5A	4.0A	3.6A
BRM 40-10	10A	9A	8.1A	7.3A
BRM 40-30	30A	27A	24A	22A
BRM 40-50	50A	45A	40A	36A

3.1 OVERALL DIMENSIONS AND WEIGHTS

Table 3 Overall dimensions and weights

	WIDTH	HEIGHT	DEPTH	WEIGHT
BRM 60-01	201.4mm(7.93in)	130mm(5.118in)	230mm(9.06)	6.80Kg(15lbs)
BRM 60-03	201.4mm(7.93in)	130mm(5.118in)	380mm(14.96)	12.3Kg(27lbs)
BRM 40-05	201.4mm(7.93in)	130mm(5.118in)	380mm(14.96)	12.3Kg(27lbs)
BRM 40-10	201.4mm(7.93in)	130mm(5.118in)	480mm(18.90)	18.1Kg(40lbs)
BRM 40-30	440mm(7.93in)	132mm(5.2in)	470mm(18.50)	43.0Kg(95lbs)
BRM 50-50	440mm(17.3in)	176mm(6.96in)	483mm(19.00)	63.6Kg(140lbs)

DIMENSION DIAGRAMS

		BENCH MODEL (SEE FIG A)				
		A	B	C	D	E
BRM 40-30	MILLIMETRES	440	132	470	50	25
	INCHES	17·3	5·2	18·5	2	1
BRM 40-50	MILLIMETRES	440	177	483	50	25
	INCHES	17·3	6·968	19	2	1

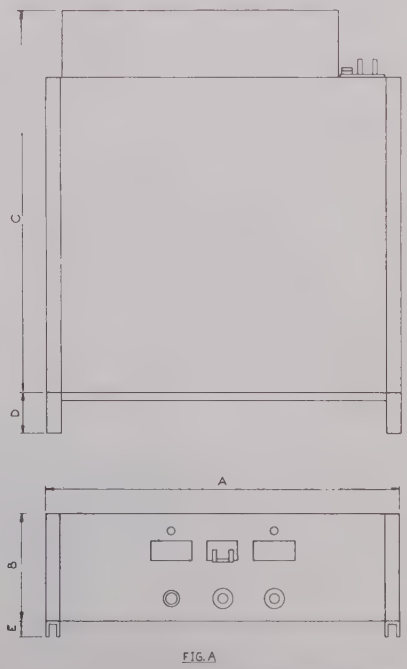

FIG. A

continued overleaf

DIMENSION DIAGRAMS (cont.)

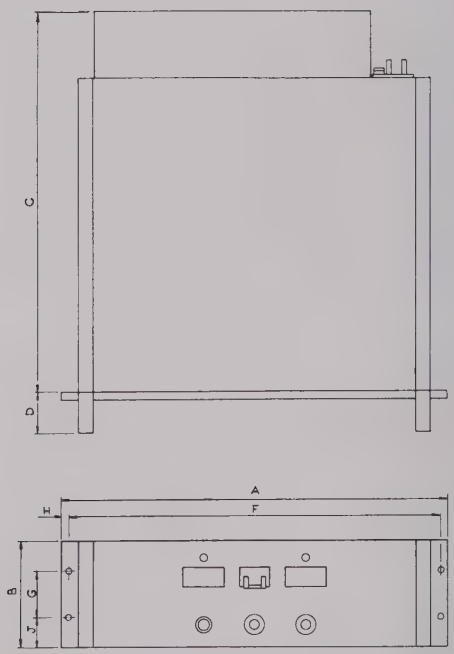

FIG. B

RACK MOUNTING (SEE FIG. B)							
A	B	C	D	F	G	H	J
482	132	470	50	465	57·0	8·5	37·7
19	5·2	18·5	2	18·310	2·25	·334	1·483
482	177	483	50	465	101·5	8·5	37·7
19	6·968	19	2	18·310	4·00	·334	1·483

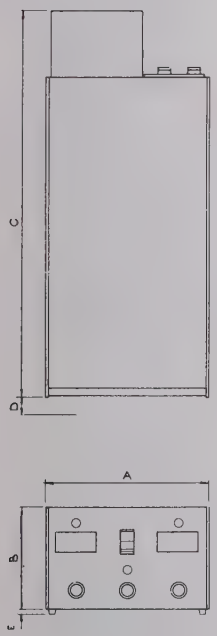

FIG.C

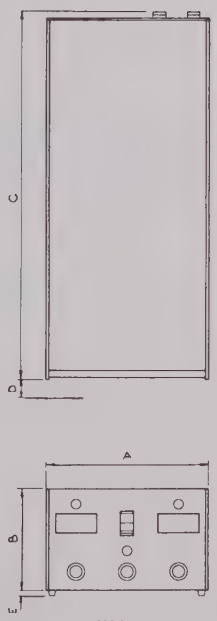

FIG.D

HALF RACK UNITS							
			A	B	C	D	E
BRM40-10	FIG.C	MILLIMETRES	201·4	130	480	24	13
		INCHES	7·93	5·118	18·90	·937	·515
BRM40-05	FIG D	MILLIMETRES	201·4	130	380	24	13
		INCHES	7·93	5·118	14·961	·937	·515
BRM60-03	FIG D	MILLIMETERS	201·4	130	380	24	13
		INCHES	7·93	5·118	14·961	·937	·515
BRM60-01	FIG D	MILLIMETERS	201·4	130	230	24	13
		INCHES	7·93	5·118	9·06	·937	·515

A — Transformer Primary Connections on 1 Amp to 10 Amp Units.

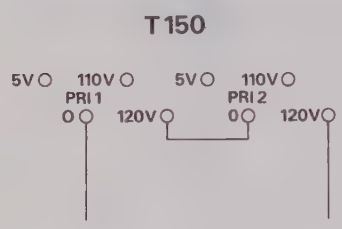

CONNECTIONS FOR 240 VOLT OPERATION

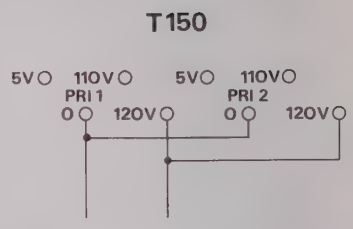

CONNECTIONS FOR 120 VOLT OPERATION

B — Transformer Primary Connections on BRM 40-30

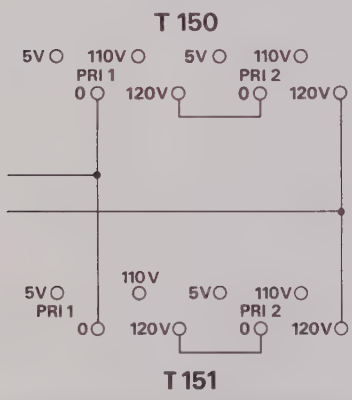

CONNECTIONS FOR 240 VOLT OPERATION

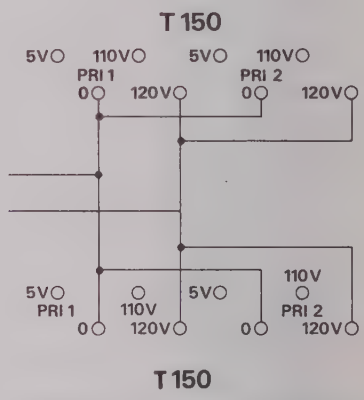

CONNECTIONS FOR 120 VOLT OPERATION

C — Transformer Primary Connections on BRM 40-50.

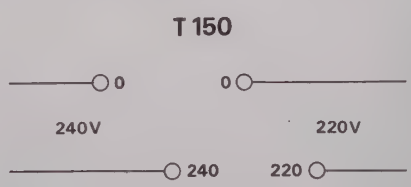

CONNECTIONS FOR 220/240 VOLT OPERATION

Fig. 1 Connection Diagrams

3.2 A.C. SUPPLY

1A to 10 Amp Units:–

Remove top cover by removing retaining screws. Verify that the connections to the primary of the mains transformer T150 correspond to the voltage of the local supply, and that supply fuse FS150 is correct for the unit in use (See Table 4)

The primary connections of T150 should be paralleled when the local supply is 110 to 125 volts.

30 Amp Unit:–

Remove the bottom cover by removing retaining screws. Verify that the connections to the primaries of T150, T151 correspond to the voltage of the local supply. On 220 to 250 volt operation the primaries of T150, 151 are connected in series/parallel as shown in the circuit diagram Fig. 8.
On 110 to 125 volt supplies the primaries are to be connected in parallel.

50 Amp Unit:–

Remove the front panel by removing the four fixing screws. Verify that the connections to the primary of T150 correspond to the voltage of the local supply.

NOTE: *There are only two taps on the unit i.e. 220v or 240 volts.*

Table 4 Fuse Rating (Fuses up to 10 Amp must be HRC type)

	FS 150		FS151
	110-125 volts	220-250 volts	
BRM 60-01	5A	3A	2A
BRM 60-03	15A	7A	5A
BRM 40-05	15A	7A	7A
BRM 40-10	20A	10A	12A

Preliminary Checks

Before applying A.C. supply to the unit, ensure that the correct fuses are fitted as specified in Table 4. (where required)

For local programming and sensing check that the links on the rear terminal blocks are as follows:

TB150 1 – 2
TB150 4 – 5

+ve output linked to +ve sense.
–ve output linked to –ve sense.

3.2 A.C. SUPPLY (cont.)

NOTE *If these links are not made, the unit will not operate satisfactory. When the preliminary checks have been completed, connect the line supply.*

3.3 RESETTING THE OUTPUT VOLTAGE

When setting up a specified output voltage the following conditions should be observed:–

1. The current limit control on the front panel should be fully clockwise.
2. The overvoltage trip control should be fully clockwise.

Standard

The Voltage Fine control should be switched to the "CAL" position. The output voltage of the unit will then be as indicated by the digital switches, so long as the voltage mode lamp is on.

'A' Version

The voltage can be set with the "coarse" and "fine" controls, and the output voltage read on the meter with an accuracy of ±2%.

The constant current level and the overvoltage trip may then be set as shown in Section 3.4 and 3.5.

3.4 RESETTING THE OUTPUT CURRENT

The constant current limit is set by the current limit control positioned on the front panel. The control may be set to any value of current within the range of 50mA to 100%. This control is vernier calibrated on the 30 and 50 Amp units.

To set the control to the required level, it is necessary that the unit is operated in the current limit mode. This may be conveniently carried out by connecting a short circuit across the output terminals. Current mode operation is confirmed by the current mode lamp being on, and the control may then be adjusted to the required level as indicated by the ammeter or vernier scale where fitted.

3.5 RESETTING THE OVERVOLTAGE PROTECTION

1. Remove the load and ensure that the overvoltage control is fully clockwise and the output voltage set to zero.
2. Set the overvoltage control to the level required (normally 110% of the nominal output voltage)
3. Slowly increase the output voltage control to ensure that the trip operates at the required level.
4. To reset, set the output voltage to the nominal output and switch mains off and then on again.

NOTE *On the 30 Amp and 50 Amp units the overvoltage trip operates the main circuit breaker.*

3.6 REMOTE PROGRAMMING

Voltage, current and overvoltage levels can be controlled externally by removing the links shown and using external resistors. The resistance of the connecting wires should be taken into account when calculating the values of the programming resistors. The wires and resistors should be shielded from stray electromagnetic fields to minimise noise pick-up.

3.6.1 Voltage Control

To connect the unit for external programming the procedure is as follows:–

1. Remove the A.C. supply.
2. Remove the link between terminals 4 and 5 on TB150 (rear terminal block)
3. Connect the programming resistor between terminals 4 and 6. (See section 2 for value)
4. Reconnect the A.C. supply and switch on.

3.6.2 Current Control

1. Remove the A.C. supply.
2. Remove the link between terminals 1 and 2 on TB150.
3. Connect the programming resistor between terminals 2 and 3 (See section 2 for value)
4. Reconnect the A.C. supply and switch on.

3.6.3 Overvoltage Control

1. Remove the A.C. supply.
2. Lower the rear panel by removing the relevant fixing screws (Side panel on the 40-05 unit)
3. Remove the link between pins 5 and 6 on the overvoltage Printed Circuit Board Assy. No. 60373
4. Connect the programming resistor between pins 1 and 6 on the overvoltage board. (See Section 2 for value)

NOTE *When a function is being externally programmed, the front panel controls become inoperable.*

3.7 PARALLEL OPERATION

Units may be connected in parallel, up to 5 units or a maximum total current of 100 Amps, whichever is the less. A diode must be connected in series with each unit as shown. The voltage and current rating of the diode must be in excess of the output rating of the units. The diode is in circuit to protect the internal overvoltage thyristor in each unit.

For best voltage regulation the terminal labelled 'P' on each unit should be returned to a common point and four terminal sensing used as described in Section 3.9 but this is not essential.

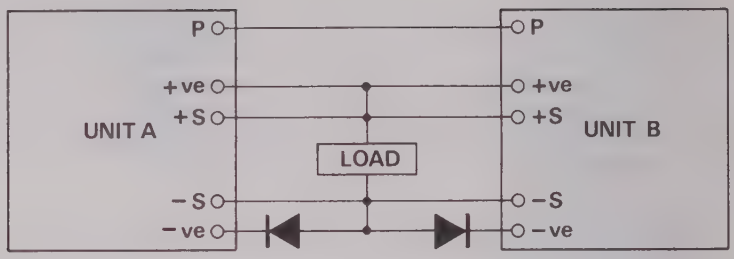

Fig.2 Parallel Operation

3.8 SERIES OPERATION

These units may be connected in series, up to maximum output of 250 volts. A diode should be connected across each unit as shown, the voltage and current rating of which must exceed that of the units. The output voltage of the individual units.

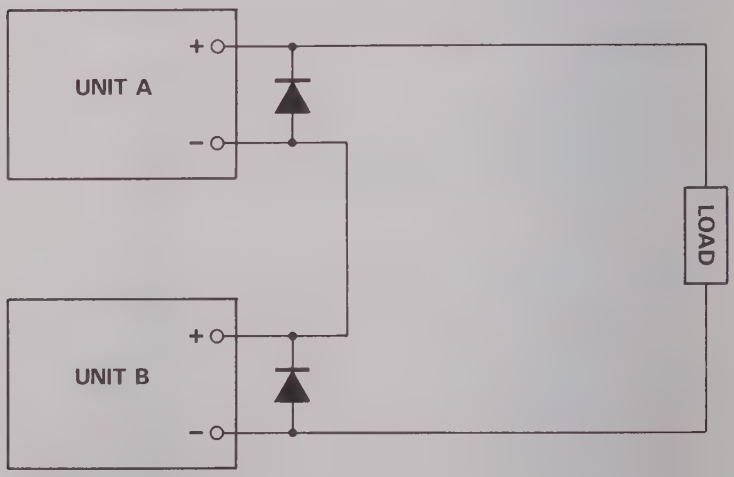

Fig. 3 Series Operation

3.9 FOUR TERMINAL SENSING

Where long external leads are used to connect to the load, four terminal sensing is provided to enable the load regulation of the power supply to be maintained at the load terminals. The links between the POWER and SENSING TERMINALS should be removed and the supply connected as shown. The sensing leads should be twisted and shielded to avoid "noise" pick-up. A decoupling capacitor may be connected across the load to maintain the high frequency output impedance. The maximum permissible voltage drop in the external leads when using four terminal sensing is 0.5 volt total in both leads, i.e. 0.25V in each lead +ve and –ve or 0.5V in one supply lead with a ground return of negligible resistance. The total permissible length of lead for 0.5 volt drop is listed in Table for various wire sizes and current ratings. Note that this is the total permissible loop length "go and return" and that the power supply can only be situated at half this distance from the load for a two wire +ve and –ve lead system.

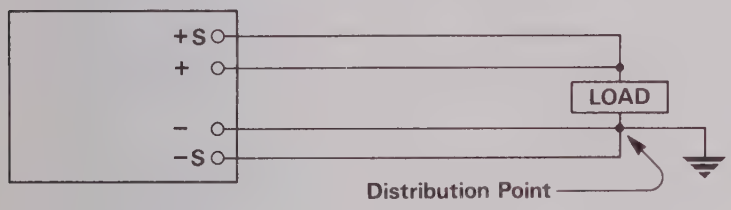

Fig. 4 Four Terminal Sensing

Table 5 Permissible lead lengths

	7/0076	14/0076	23/0076	40/0076	70/0076	110/0076
BRM 60-01	6mtr(19ft)	12mtr(38ft)				
BRM 60-03		4 mtr(13ft)	6mtr(19ft)			
BRM 40-05			4mtr(13ft)	6mtr(21ft)		
BRM 40-10				3mtr(11ft)	6mtr(19ft)	
BRM 40-30					Par.leads 4mtr(13ft)	3mtr(11ft)
BRM 40-50						Par leads 4mtr(13ft)

Wire size specified as per output current rating of unit

4.1 GENERAL

A simplified functional diagram of the circuitry of the power unit is shown in Fig.5. The voltage and current modes of operation are controlled by two independent bridge circuits. Any variation of load current or output voltage produces an out of balance condition of the associated bridge. The output of the bridge is applied to a comparator amplifier whose output is fed into a mode gate. The output of the mode gate controls the output resistance of a series regulator which restores the original mode condition. The circuit cannot operate in both modes simultaneously, and only the control signal from the bridge corresponding to the mode of operation passes through the gate.

Crossover from one mode to another is automatic and the point of crossover is determined by the settings of the voltage control R208-221 and current limit control R167.

An auxiliary stabilised power supply is also incorporated. This supplies the bridge circuits and the comparator amplifiers, in order to simplify the functional diagram, the output connections of the auxiliary supply are not shown. Overvoltage protection is carried out by a sensing circuit connected across the stabilised output terminals. The overvoltage level can be set by a front panel control.

The pre-regulator section maintains the voltage on the input filter capacitor C153 at a controlled level above the output voltage in order to lower the power dissipation in the series regulator.

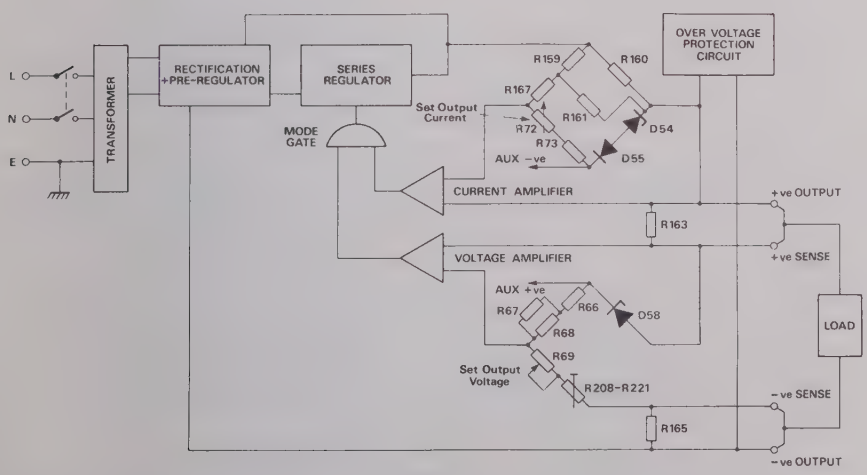

Fig. 5 Functional Circuit Diagram

4.2 A.C. SUPPLY

1A to 10 Amp Unit The A.C. input within the range of 110-125 volts and 220-250 volts is applied to the primary of T150 via A.C. supply switch, S150, thermal cut-out TH150 and supply fuse FS150.

The transformer has three secondary windings. The output voltage derived from one winding provides the auxiliary supply for the pre-regulator control circuitry, and another provides the auxiliary supply for the linear regulator control circuitry. The third and main winding is applied to the thyristor controlled bridge.

30 Amp Unit The AC input within the range of 110-125 volts is applied to the primaries of T150 and T151 via the double pole circuit breaker MCB1, MCB2.

Each transformer has two power secondary windings and one auxiliary winding. The power secondaries on these transformers are connected in series-parallel, in order to achieve the current rating required by the output current of 30 amps D.C. The primaries of T150 and T151 are connected in series/parallel or parallel depending on the local supply voltage.

50 Amp Unit This unit can only accept AC inputs within the range 220-240 volts, the limitation being due to the high line currents that would be needed on 110 volt operation.

The transformer has six bobbins, two of which are primaries and connected in series, and four secondaries which are connected in parallel.

4.3 RECTIFICATION AND PRE-REGULATION

The purpose of this circuit is to maintain the voltage across the series transistors constant, irrespective of the output voltage and current demand. This is achieved by controlling the firing angle of the thyristors in the main rectifier system, and allows considerable saving in the power dissipated within the unit.

The circuit operation is as follows:– Thyristors CSR150 and CSR151 are triggered by T4 and T5 respectively, which are driven by T2, through a diode gating circuit formed by D3-D5. A ramp generating circuit is formed by R4 and C2, the ramp being synchronised to the mains by T1. The voltage across the series transistors i.e. sensed by resistor chain R20-R24 and compared to the reference voltage derived across D10. The comparator amplifier T3 is also fed with the ramp signal through R17 and positive voltage feedback via R14-R16.

If for any reason the voltage across the series transistors is low T3 will turn on sooner during each mains half cycle, thus advancing the thyristor firing point and increasing the voltage across the series transistors.

4.4 SERIES REGULATOR

The series regulator contains transistors TR150, TR151 (which may consist of several transistors in parallel) arranged in a Darlington-pair configuration. An increasing positive signal applied to the base of TR150, decreases the output

4.4 SERIES REGULATOR (cont.)

resistance of the circuit; conversely, a decreasing signal increases the output resistance. Each transistor in TR151, has a separate resistor in the emitter circuit to provide current sharing between transistors. The voltage developed by the flow of load current through the resistor R160 is connected across a common potential divider network of resistor R159 and R161 to provide a voltage signal proportional to the output current which is standardised at 0.85 volt for 100% output current.

4.5 BRIDGE REFERENCE SOURCE

Two reference sources are used, one for voltage control, one for current control.

The voltage reference is D58 which is connected in series with the resistor network R60, R61 and R62 across the auxiliary supply voltage. To achieve good performance this zener diode is fed by a constant current source TR51 and TR52 which also supplies the current reference diodes D54 and D55. An additional stabilising stage is used for the voltage amplifier comprising zener diodes D52 and D53.

4.6 VOLTAGE CONTROL BRIDGE

The circuitry which senses any tendency of the output voltage to change is shown in a bridge configuration in Fig. 4. Any unbalance of the bridge is detected by the voltage amplifier IC52.

As shown in Fig. 4 the resistor network R66, R67, R68 and R169, R208-R221 form two arms of the voltage control bridge. When the bridge is balanced, the voltage condition is as follows:–

$$V_{D58} = V_{(R66+67/68)}$$

$$V_{(R169 + R208 \text{ to } R221} = V_{OUT}$$

For V_{OUT} to equal $V_{(R169 + R208 \text{ to } R221)}$ at all settings of R169 and R208 to R221, the output voltage must be a direct function of the resistance of R169 and R208 to R221, i.e. 1000Ω/VOLT-OUTPUT.

4.7 VOLTAGE CONTROL

With the bridge balanced, the circuit will remain in equilibrium until the output voltage tends to change. Any change in the output voltage across the load is fed back where comparison takes place in IC52. The resultant change in the output of IC52 is fed via the mode gate to the series regulator, which change output resistance in such a direction as to counteract the original change in voltage.

4.8 CURRENT CONTROL BRIDGE

The circuitry forms a bridge configuration as shown in Fig. 5 and operates in the same manner as the voltage control bridge.

4.9 CURRENT CONTROL

With the bridge balanced, the circuit will remain in equilibrium until the output current tends to change. Any change of load current changes the voltage drop across resistors R161 with respect to D54. A proportion of this voltage change is applied via R167 to current amplifier IC51. The resultant change in the output of IC51 is fed into the series regulator via the mode gate. The series regulator changes its output resistance so as to counteract the original change in current.

4.10 MODE OF OPERATION

The mode of operation of the power supply is determined by the load conditions and the setting of the voltage and current controls. Automatic crossover from one mode to another is depicted in Fig. 6 and occurs at the value of load resistor designated R_C. The value (in ohms) of the load resistor R_C is obtained by dividing the voltage (volts) set by R169, R208-R221, and the current (amps) set by R167. When the power supply is connected to any load R_{CV}, whose resistance is more than R_C, the mode of operation is constant voltage. When the resistance of the load decreases to any value R_{CC} below R_C the mode of operation is constant current.

The mode gate is formed by R57, D56 and D57, which is controlled by amplifiers IC51 and IC52. The amplifiers IC51, IC52 act as drains for the base current supply of TR53 which is supplied via R57. When the supply is in the voltage mode, IC52 acts as a drain via D56, thus controlling the output of TR53. Whilst operating in the voltage mode D57 is reverse biased until such time as the power supply begins to operate in the constant current mode. At this point IC51 takes over control via D57.

The mode indicator detector which operates the mode relay is driven from the output of the current amplifier IC51. As the unit is switched from voltage to current control, the output of IC51 drops and turns TR55 on, which turns on TR56 and relay driver TR54. The relay operates and changes the auxiliary contacts and front panel indication over to current mode.

The Crossover Load

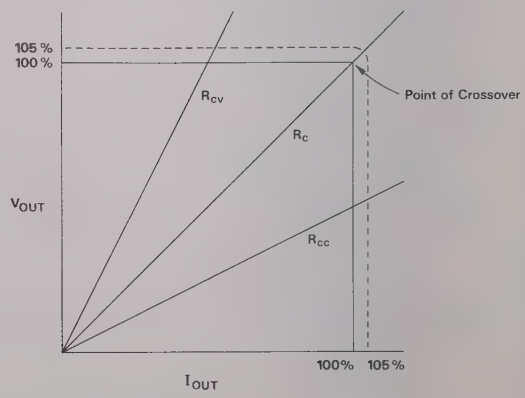

Fig. 6 Mode of Operation

4.11 OVERVOLTAGE PROTECTION

The overvoltage circuit used is the two terminal type. TR101 and TR102 form a complementary bistable which is in the normally off condition. If the output voltage of the unit exceeds the value set by R168, R106, R107 the bistable is triggered thus turning CSR101 on. This signal thyristor has two functions.

(a) It applies a trigger signal to the gate of the main crowbar thyristor, thus clamping the output voltage to the forward voltage drop of the thyristor.
(b) On the 30 and 50 Amp units it operates the relay trip coil on the main circuit breaker, thus removing the mains supply as well as crowbarring the output.

4.12 THERMAL AND MAINS CUT-OUT

On the 30 and 50 Amp units a double pole circuit breaker is connected in the AC input to the transformer. One half of the circuit breaker protects against short circuits within the transformer and rectifier assemblies. The other half has an isolated relay trip coil which is operated by an overvoltage signal or over-temperature signal.

A thermal cut-out is fitted to all units, which on the larger units, as stated above, operates on the circuit breaker.

On the 1 to 10 Amp units the thermal cut-out operates in the mains supply to the transformer.

4.13 EXTERNAL PROGRAMMING

As explained during the description of the voltage and current control bridges, the balance conditions of the bridges are such that the following conditions exist:–

1. The voltage across R169, R208–R221 is equal to the output voltage. Therefore a change in the above resistance network produces a directly proportional change of output voltage.
2. The voltage across the resistance of R167 is equal to the voltage across the resistor R161, which in turn is directly proportional to output current. A change of resistance of R167 produces a directly proportional change of output current.

Thus resistance-output voltage and resistance-output current relationships exist and these are expressed as Ω/V and Ω/A scale factors, respectively. By disconnecting the variable resistors from circuit, and in their place connecting (by remote line if necessary) fixed or variable resistors, the output conditions can be set by altering the value of the resistors. The advantage of this circuit facility, is that without any monitoring or metering aid, the voltage and current can be set simply by the value of resistance in circuit.

The method of connecting the unit for external programming of output voltage, output current and overvoltage is detailed in Section 3.

5.1 ACCESS TO COMPONENTS

Access to the front panel components may be gained by removing the four front panel fixing screws, and hinging the front panel forward on the cableform. Access to the rear of the unit is obtained by removing the rear panel fixing screws and lowering the rear panel. By then removing the top cover, complete access can be obtained.

5.2 REPLACEMENT OF PRINTED CIRCUIT BOARDS

The plug-in boards may be removed by unscrewing the board retaining screws after removing the top cover. On the 30 and 50 Amp units, it will be necessary to lower the front panel for added ease of board removal.

All plug-in boards of the same Part Number are inter-changeable and available as spare parts. The following Pt. No's should be quoted when ordering:–

1.	Amplifier P.C.B. (Plug-in)	Pt. No. 60369
2.	Pre-regulator P.C.B. (Plug-in)	Pt. No. 60363
3.	Overvoltage P.C.B. (Full Rack)	Pt. No. 60680
	(Half Rack)	Pt. No. 60373

5.3 FAULT FINDING

Determine the state of the output voltage on load and proceed as outlined in Table 6.

NOTE *If a fault develops in the pre-regulator section this will not be immediately obvious, since the unit will still perform to specification. However because of the extra dissipation in the series transistors, the heatsink temperature will rise and the thermal cut-out will operate. To avoid this, always check the pre-regulator for correct functioning after a fault is repaired. To do this proceed as follows:–*

After ensuring that the current limit operates, short the output and set the current limit to 100%. Measure the voltage between the reservoir capacitor positive, and output positive. The voltage measured should be 7.5V ±0.2V average with approximately 4 volts peak to peak of 100Hz ripple.

Table 6 Fault Finding

Output Voltage	Fault	Action
No output	Fuse FS150 or FS151 blown (1A to 10A units only)	Change fuse
	Printed circuit plug-in boards out of socket or faulty	Replace with new assemblies.
Low output 1A-10A	Over-voltage has fired	Check external circuit for over-voltage.
Low Output	Printed circuit plug-in boards faulty	Replace with new assemblies
Excessive Output Current	Programming Link or Resistor O/C	Replace
Circuit breaker trips continuously (full rack units only)	Unit set to wrong mains tap.	Reset to correct tap.
	Overvoltage set too low.	Reset
	Heatsink thermal cut-out has operated	Reset when unit has cooled
		See Note.

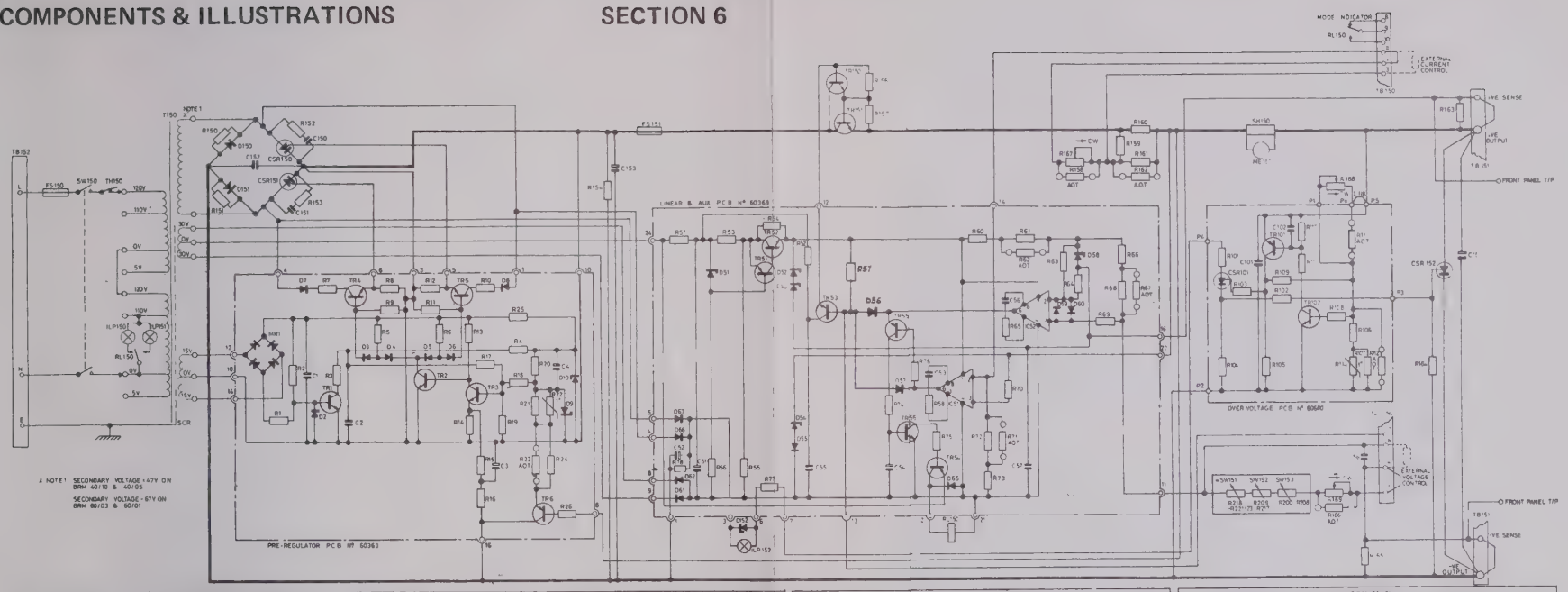

BRM 40-10

REF	DESCRIPTION	QTY	PT Nº
T150	TRANSFORMER	1	60882
	RESISTORS		
R150	4K7 6W WW	1	138
R151	4K7 6W WW	1	138
R152	10R 25W WW	1	31899
R153	10R 25W WW	1	31899
R154	10K 6W WW	1	381
R155	NOT USED		
R156	470R MO 2%	7	26739
R157	100R MO 2%	4	26747
R158	ADJ T		
R159	22R MO 2%	4	26750
R160	DR39 6W WW	4	18004
R161	68R MO 2%	1	28779
R162	ADJ T		
R163	100R MO 2%	1	26747
R164	1K MO 2%	1	27346
R165	100R MO 2%	1	26747
R166	ADJ T		
R167	1K2 CONTROL POT	1	23062
R168	25K CONTROL POT	1	52682
R169	120R CONTROL POT	1	52645
R200-208	100R MF 0.2%	9	52656
R209-217	1K MF 0.2%	9	52657
R218-221	10K MF 0.2%	4	52658
	CAPACITORS		
C150	1µF 160V POLYESTER	1	31383
C151	1µF 160V POLYESTER	1	31383
C152	1µF 160V POLYESTER	1	31383
C153	10000µF 75V ELECT	2	21685
C154	NOT USED		
C155	2200µF 63V ELECT	1	50599
C156	5µF 64V ELECT	1	20773
	TRANSISTORS		
TR150	RCA	1	52360
TR151	RCA	4	52360
	DIODES		
D150	SL203A	1	50832
D151	SL203A	1	50832
D152	6.2V ZENER	1	4032
	THYRISTORS		
CSR150	17TB2	1	52661
CSR151	17TB2	1	52661
CSR152	CRS24-101B	1	52260
	FUSES		
FS150(230V)	10A HRC	1	4227
FS150(110V)	20A	1	130882
FS151	12A	1	2984
ME150	METER 0-10A	1	52663
	SWITCHES		
SW150	MAINS	1	52708
SW151	DIGITAL	1	52654
SW152	DIGITAL	1	52654
SW153	DIGITAL	1	52655
	INDICATING LAMPS		
ILP150	110V AMBER	1	52649
ILP151	110V AMBER	1	52649
LP152	6V RED	1	52668
RL150	RELAY MH2 24V	1	50735
TH150	THERMAL CUT-OUT T20704	1	52786
SH150	SHUNT 10A	1	52664

BRM 40-05

REF	DESCRIPTION	QTY	PT Nº
T150	TRANSFORMER	1	60893
	RESISTORS		
R150	4K7 6W WW	1	138
R151	4K7 6W WW	1	138
R152	10R 25W WW	1	31899
R153	10R 25W WW	1	31899
R154	10K 6W WW	1	381
R155	NOT USED		
R156	470R MO 2%	1	26739
R157	51R MO 2%	1	28776
R158	ADJ T		
R159	10R MO 2%	2	26771
R160	DR39 5W WW	2	18004
R161	68R MO 2%	1	28779
R162	ADJ T		
R163	100R MO 2%	1	26747
R164	1K MO 2%	1	27346
R165	100R MO 2%	1	26747
R166	ADJ T		
R167	1K2 CONTROL POT	1	23062
R168	25K CONTROL POT	1	52682
R169	120R CONTROL POT	1	52645
R200-208	100R MF 0.2%	9	52656
R209-217	1K MF 0.2%	9	52657
R218-221	10K MF 0.2%	4	52658
	CAPACITORS		
C150	1µF 160V POLYESTER	1	31383
C151	1µF 160V POLYESTER	1	31383
C152	1µF 160V POLYESTER	1	31383
C153	3600µF 63V ELECT	2	52702
C154	NOT USED		
C155	1800µF 50V ELECT	1	52705
C156	5µF 64V ELECT	1	20773
	TRANSISTORS		
TR150	RCA	1	52360
TR151	RCA	2	52360
	DIODES		
D150	SL203A	1	50832
D151	SL203A	1	50832
D152	6.2V ZENER	1	4032
	THYRISTORS		
CSR150	17TB2	1	52661
CSR151	17TB2	1	52661
CSR152	BTY87/100R	1	23074
	FUSES		
FS150(230V)	7A HRC	1	13040
FS150(110V)	15A	1	3649
FS151	7A HRC	1	13040
ME150	METER 0-5A	1	52669
	SWITCHES		
SW150	MAINS	1	52708
SW151	DIGITAL	1	52654
SW152	DIGITAL	1	52654
SW153	DIGITAL	1	52655
	INDICATING LAMPS		
ILP150	110V AMBER	1	52649
ILP151	110V AMBER	1	52649
ILP152	6V RED	1	52668
RL150	RELAY MH2 24V	1	50735
TH150	THERMAL CUT-OUT T20704	1	52786
SH150	SHUNT 5A	1	52636

BRM 60-03

REF	DESCRIPTION	QTY	PT Nº
T150	TRANSFORMER	1	60875
	RESISTORS		
R150	4K7 6W WW	1	138
R151	4K7 6W WW	1	138
R152	10R 25W WW	1	31899
R153	10R 25W WW	1	31899
R154	10K 6W WW	1	381
R155	NOT USED		
R156	470R MO 2%	1	26739
R157	51R MO 2%	1	28776
R158	ADJ T		
R159	10R MO 2%	2	26771
R160	DR68 5W WW	2	4761
R161	68R MO 2%	1	28779
R162	ADJ T		
R163	100R MO 2%	1	26747
R164	1K MO 2%	1	27346
R165	100R MO 2%	1	26747
R166	ADJ T		
R167	1K2 CONTROL POT	1	23062
R168	50K CONTROL POT	1	52762
R169	120R CONTROL POT	1	52645
R200-208	100R MF 0.2%	9	52656
R209-217	1K MF 0.2%	9	52657
R218-223	10K MF 0.2%	6	52658
	CAPACITORS		
C150	1µF 160V POLYESTER	1	31383
C151	1µF 160V POLYESTER	1	31383
C152	1µF 160V POLYESTER	1	31383
C153	3300µF 100V ELECT	2	52797
C154	NOT USED		
C155	870µF 80V ELECT	1	52798
C156	5µF 64V ELECT	1	20773
	TRANSISTORS		
TR150	RCA	1	5236
TR151	RCA	2	52361
	DIODES		
D150	SL203A	1	50832
D151	SL203A	1	50832
D152	6.2V ZENER	1	4032
	THYRISTORS		
CSR150	5TB2	1	52744
CSR151	5TB2	1	52744
CSR152	BTY87/100R	1	23074
	FUSES		
FS150(230V)	7A HRC	1	13040
FS150(110V)	15A	1	3649
FS151	5A HRC	1	639
ME150	METER 0-3A	1	52743
	SWITCHES		
SW150	MAINS	1	52708
SW151	DIGITAL	1	52654
SW152	DIGITAL	1	52654
SW153	DIGITAL	1	52655
	INDICATING LAMPS		
ILP150	110V AMBER	1	52649
ILP151	110V AMBER	1	52649
ILP152	6V RED	1	52668
RL150	RELAY MH2 24V	1	50735
TH150	THERMAL CUT OUT T20704	1	52786
SH150	SHUNT 3A	1	52741

BRM 60-01

REF	DESCRIPTION	QTY	PT Nº
T150	TRANSFORMER	1	60902
	RESISTORS		
R150	SEE PCB ASSY Nº 60941		
R151	SEE PCB ASSY Nº 60941		
R152	SEE PCB ASSY Nº 60941		
R153	SEE PCB ASSY Nº 60941		
R154	10K 6W WW	1	381
R155	NOT USED		
R156	470R MO 2%	1	26739
R157	100R MO 2%	1	26747
R158	ADJ T		
R159	10R MO 2%	2	28771
R160	1R 6W WW		239
R161	68R MO 2%	1	28779
R162	ADJ T		
R163	100R MO 2%	1	26747
R164	SEE PCB ASSY Nº 60941		
R165	100R MO 2%	1	26747
R166	ADJ T		
R167	1K2 CONTROL POT	1	23062
R168	50K CONTROL POT	1	52762
R169	120R CONTROL POT	1	52645
R200-208	100R MF 0.2%	9	52656
R209-217	1K MF 0.2%	9	52657
R218-223	10K MF 0.2%	8	52658
	CAPACITORS		
C150	SEE PCB ASSY Nº 60941		
C151	SEE PCB ASSY Nº 60941		
C152	SEE PCB ASSY Nº 60941		
C153	1500µF 100V ELECT	1	51362
C154	NOT USED		
C155	870µF 80V ELECT	1	52798
C156	5µF 64V ELECT	1	20773
	TRANSISTORS		
TR150	RCA	1	5236
TR151	RCA	1	52361
	DIODES		
D150	SEE PCB ASSY Nº 60941		
D151	SEE PCB ASSY Nº 60941		
D152	6.2V ZENER	1	4032
	THYRISTORS		
CSR150	SEE PCB ASSY Nº 60941		
CSR151	SEE PCB ASSY Nº 60941		
CSR152	SEE PCB ASSY Nº 60941		
	FUSES		
FS150(230V)	3A HRC	1	12699
FS150(110V)	5A HRC	1	639
FS151	3A HRC		13041
ME150	METER 0-1A	1	52749
	SWITCHES		
SW150	MAINS	1	52708
SW151	DIGITAL	1	52654
SW152	DIGITAL	1	52654
SW153	DIGITAL	1	52655
	INDICATING LAMPS		
ILP150	110V AMBER	1	52649
ILP151	110V AMBER	1	52649
ILP152	6V RED	1	52668
RL150	RELAY MH2 24V	1	50735
TH150	THERMAL CUT-OUT T20704	1	52786
SH150	SHUNT 1A	1	52750

NOTES - ADJUST ON TEST RESISTOR PROCEDURE

R162 ADJUST R163 TO GIVE A READING OF 0.85 VOLT ±1% ACROSS R161 WITH THE OUTPUT LOAD CURRENT SET TO UNIT VOLTAGE 11% (ie 60-03 AT 3 AMPS

R158 ADJUST R158 TO GIVE THE SPECIFIED MAXIMUM O/P CURRENT WITH THE "CURRENT CONTROL" POTENTIOMETER SET AT MAXIMUM CLOCKWISE.

R166 ADJUST R166 TO GIVE A READING OF 100mV ±1% ACROSS R169 WITH THE "FINE VOLTAGE CONTROL" SET FULLY CLOCKWISE

R172 ADJUST R172 TO SET THE OVER VOLTAGE TRIP AT 40 VOLTS WITH THE FRONT PANEL CONTROL SET AT 40 VOLTS

Fig. 7 1A to 10A Circuit Diagram + Component Schedule

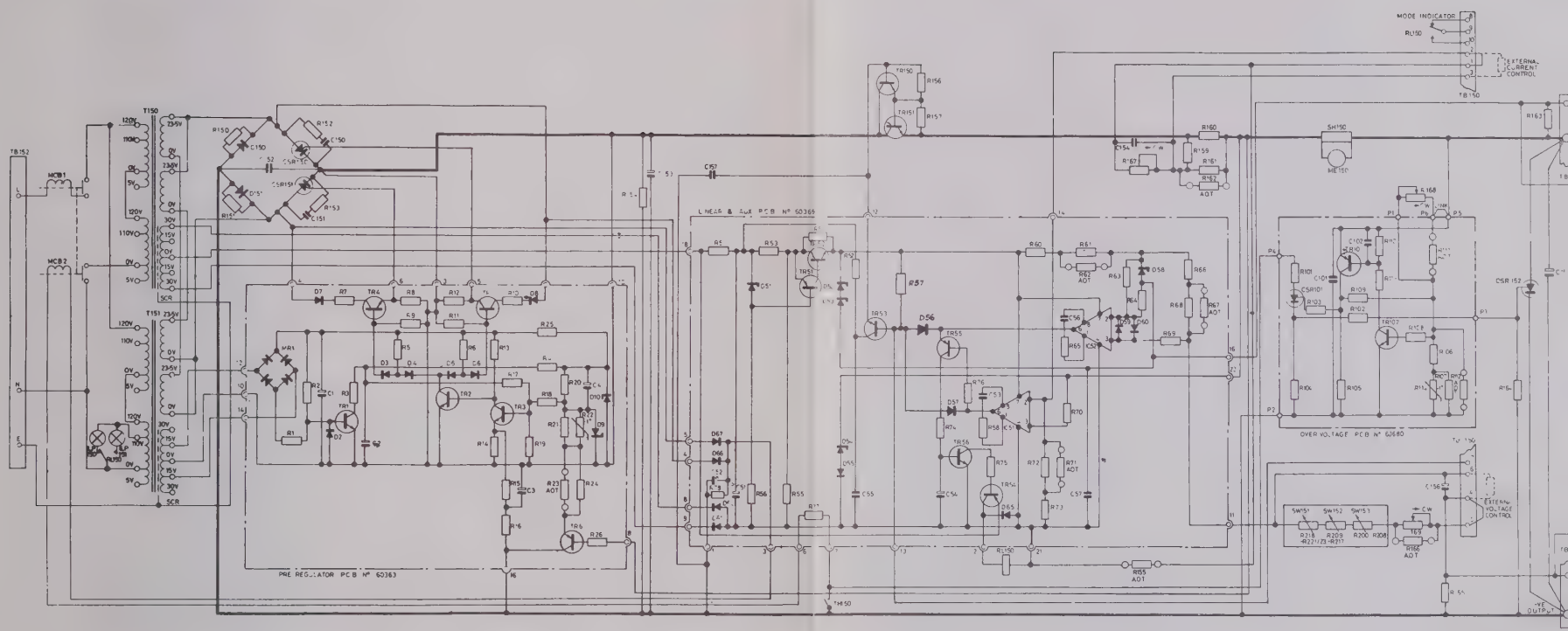

ADJUST ON TEST RESISTOR PROCEDURE

R162 ADJUST R162 TO GIVE A READING OF 0·85V ± 1% ACROSS R151 AT AN OUTPUT LOAD CURRENT OF 30 AMPS.

R155 ADJUST R155 TO GIVE A MAXIMUM O/P CURRENT OF 30 AMPS ± 1% WITH THE "CURRENT CONTROL" POTENTIOMETER AT MAXIMUM CLOCKWISE

R166 ADJUST R166 TO GIVE A READING OF 100mV ± 1% ACROSS R169 WITH THE "FINE VOLTAGE CONTROL" AT MAXIMUM CLOCKWISE

R112 ADJUST R112 TO SET THE OVER VOLTAGE TRIP AT 40 VOLTS WITH THE FRONT PANEL CONTROL SET AT 40 VOLTS

REF	DESCRIPTION	QTY	PT Nº	REF	DESCRIPTION	QTY	PT Nº	REF	DESCRIPTION	QTY	PT Nº	REF	DESCRIPTION	QTY	PT Nº
T150	TRANSFORMER	1	60869	R169	120R CONTROL POT	1	52645		TRANSISTORS				SWITCHES		
T151	TRANSFORMER	1	60868					TR150	RCA	1	52360	SW151	DIGITAL	1	52654
								TR151	RCA	10	52360	SW152	DIGITAL	1	52654
												SW153	DIGITAL	1	52655
				R200-208	100R M F 0·2%	9	52656								
	RESISTORS			R209-217	1K M F 0·2%	9	52657								
R150	2K2 6W WW	1	599	R218-221	10K M F 0·2%	4	52658		DIODES						
R151	2K2 6W WW	1	599					D150	S2AR40	1	52652		INDICATING LAMPS		
R152	10R CC 1W	1	19025					D151	S2AR40	1	52652	ILP150	110V AMBER	1	52649
R153	10R CC 1W	1	19025									ILP151	110V AMBER	1	52649
R154	1K 12W WW	1	18755												
R155	ADJ				CAPACITORS										
R156	470R M OXIDE 2%	1	26739	C150	1µf 160V POLYESTER	1	31383		THYRISTORS						
R157	100R M OXIDE 2%	10	26747	C151	1µf 160V POLYESTER	1	31383	CSR150	29TB2	1	52659	RL150	RELAY MH2 24V	1	50735
R158	NOT USED			C152	1µf 160V POLYESTER	1	31383	CSR151	29TB2	1	52659				
R159	51R M OXIDE 2%	10	28776	C153	15,000µf 63V ELECT	4	59700	CSR152	29TB2	1	52659				
R160	0R33 6W WW	10	2158	C154	1µf 160V POLYESTER	1	31383								
R161	27R M OXIDE 2%	1	28774	C155	5600µf 63V ELECT	1	52702					TH150	THERMAL CUT-OUT T20704	1	52787
R162	ADJ			C156	5µf 64V ELECT	1	20773								
R163	100R M OXIDE 2%	1	26747	C157	1000pf CERAMIC	1	22187	ME 150	METER 0-30 A	1	52648				
R164	1K M OXIDE 2%	1	27346												
R165	100R M OXIDE 2%	1	26747									SH 150	SHUNT 30A	1	52660
R166	ADJ														
R167	900R CONTROL POT	1	52680					MCB 1	CIRCUIT BREAKER GANGED	1	52647				
R168	25K CONTROL POT	1	52682					MCB 2		1					

Fig. 8 30 Amp Circuit and Component Schedule

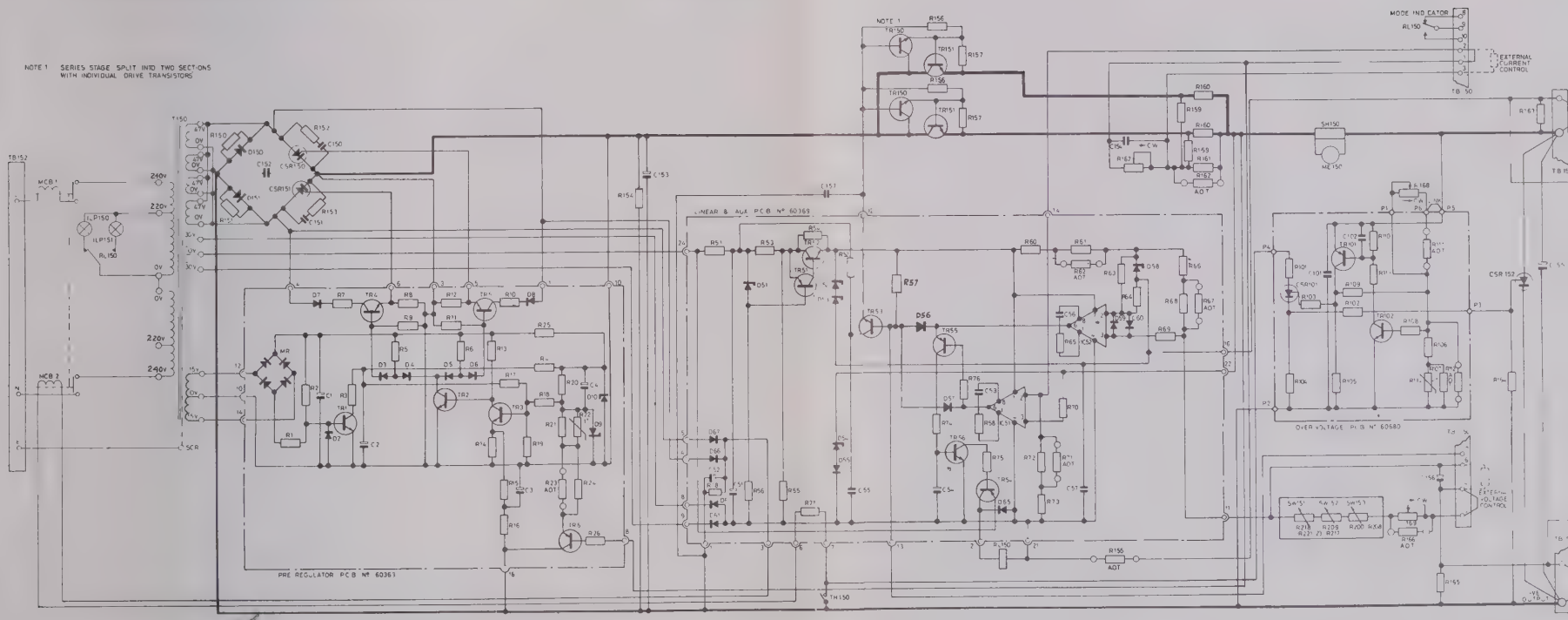

VERY BURRET
EXT 246

MHD 2m

REF	DESCRIPTION	QTY	PT Nº	REF	DESCRIPTION	QTY	PT Nº	REF	DESCRIPTION	QTY	PT Nº	REF	DESCRIPTION	QTY	PT Nº
T150	TRANSFORMER	1	60993	R169	120R CONTROL POT	1	52645		TRANSISTORS				SWITCHES		
								TR150	RCA	2	52360	SW151	DIGITAL	1	52654
								TR151	RCA	18	52360	SW152	DIGITAL	1	52654
												SW153	DIGITAL	1	52655
				R200-208	100R M F 0·2%	9	52656								
	RESISTORS			R209-217	1K M F 0 2%	9	52657								
R150	2K2 6W WW	1	599	R218-221	10K M F 0 2%	4	52658		DIODES						
R151	2K2 6W WW	1	599					D150	52AN71	1	51055		INDICATING LAMPS		
R152	10R CC 1W	1	19025					D151	52AN71	1	51055	ILP150	110V AMBER	1	52649
R153	10R CC 1W	1	19025									ILP151	110V AMBER	1	52649
R154	680R12W WW	1	18757												
R155	AOT				CAPACITORS										
R156	470R M OXIDE 2%	2	26739	C150	1µf 160V POLYESTER	1	31383		THYRISTORS						
R157	100R M OXIDE 2%	18	26747	C151	1µf 160V POLYESTER	1	31383	CSR150	38TB2	1	52783	RL150	RELAY MH2 24V	1	50735
R158	NOT USED			C152	1µf 160V POLYESTER	1	31383	CSR151	38TB2	1	52783				
R159	82R M OXIDE 2%	18	28781	C153	15,000µf 63V ELECT	6	52700	CSR152	29TB2	1	52659				
R160	0R33 5W WW	10	2158	C154	1µf 160V POLYESTER	1	31383					TH150	THERMAL CUT-OUT T 20704	1	52787
R161	27R M OXIDE 2%	1	28774	C155	12000µf 50V ELECT	1	52703								
R162	AOT			C156	5µf 64V ELECT	1	20713								
R163	100R M OXIDE 2%	1	26747	C157	1000pf CERAMIC	1	22357	ME 150	METER 0-50 A	1	52782				
R164	1K M OXIDE 2%	1	27346												
R165	100R M OXIDE 2%	1	26747									SH 150	SHUNT 50A	1	52781
R166	AOT														
R167	900R CONTROL POT	1	52681					MCB 1 / MCB 2	CIRCUIT BREAKER GANGED	1 / 1	52647				
R168	25K CONTROL POT	1	52682												

ADJUST ON TEST RESISTOR PROCEDURE

R162 ADJUST R162 TO GIVE A READING OF 0·85VOLT ±1% ACROSS R161 WITH OUTPUT LOAD SET AT 50 AMPS

R155 ADJUST R155 TO GIVE A MAXIMUM OUTPUT CURRENT OF 50 AMPS ±1% WITH THE "CURRENT CONTROL" POTENTIOMETER AT MAXIMUM CLOCKWISE

R166 ADJUST R166 TO GIVE A READING OF 100mV ± 1% ACROSS R169 WITH THE "FINE VOLTAGE CONTROL" AT MAXIMUM CLOCKWISE

R112 ADJUST R112 TO SET THE OVER VOLTAGE TRIP AT 40 VOLTS WITH THE FRONT PANEL CONTROL SET AT 40 VOLTS

Fig. 9 50 Amp Circuit and Component Schedule

	COMPONENTS ON P.C. BOARD ASSY Nº 60369							
REF	DESCRIPTION	PT Nº	REF	DESCRIPTION	PT Nº	REF	DESCRIPTION	PT Nº
	RESISTORS			CAPACITORS			DIODES	
R51	47R	26748	C51	68µf 40V ELECT	52723	D51	ZF 4·3V	1723
R52	470R	26739	C52	22µf 100V ELECT	52724	D52	ZF 8·2V	3798
R53	120R	26746	C53	0·1µf 160V POLY FILM	31377	D53	ZF 2·7V	21002
R54	750R	28790	C54	2·7µf 40V ELECT	52730	D54	ZF 6·8V	4666
R55	10K	28800	C55	5600pf CERAMIC	22394	D55	IN4148	23802
R56	3K9	26724	C56	0·01µf POLYFILM	802	D56	IN 4148	23802
R57	10K	28800	C57	5600pf CERAMIC	22394	D57	IN 4148	23802
R58	470R	26739				D58	IN 3497	29601
R59	NOT USED					D59	IN 4148	23802
R60	200R METAL FILM 1% 100ppm	50981				D60	IN 4148	23802
R61	620R	23485		TRANSISTORS		D61	IN 4003	23462
R62	AOT		TR51	BCY 70	23354	D62	IN 4003	23462
R63	33K	28810	TR52	2N3053	4039			
R64	51R	28776	TR53	2N3053	4039			
R65	470R	26739	TR54	BFX29	50181	D65	IN 4148	23802
R66	5K6 METAL FILM 1% 25ppm	52725	TR55	BCY 70	23354	D66	IN 4003	23462
R67	AOT		TR56	BC107	26790	D67	IN 4003	23462
R68	1K METAL FILM 0·2% 25ppm	50727						
R69	5K1	28794						
R70	5K1	28794						
R71	AOT							
R72	2K	26731						
R73	7K5	28797		INTEGRATED CIRCUITS				
R74	470K	27574	IC51	709C	26664			
R75	160K	28827	IC52	709C	26664			
R76	470K	27574						
R77	22R 6W WW	19798						
R78	100K	28822						

COMPONENTS ON P.C. ASSY Nº 60941		
REF	DESCRIPTION	PT Nº
	RESISTORS	
R150	4K7 6W WW	138
R151	4K7 6W WW	138
R152	10R 2·5W WW	31899
R153	10R 2·5W WW	31899
R164	1K MO 2%	27346
	CAPACITORS	
C150	1µf 160V POLYESTER	31383
C151	1µf 160V POLYESTER	31383
C152	1µf 160V POLYESTER	31383
	DIODES	
D150	IN5402	51382
D151	IN5402	51382
	THYRISTORS	
CSR150	40658	52760
CSR151	40658	52760
CSR152	40658	52760

COMPONENTS ON P.C. BOARD ASSY No 60680		
REF	DESCRIPTION	PT No
	RESISTORS	
R101	LINK	
R102	10R	28771
R103	220R	26743
R104	1R2 6W WW	4260
R105	1K2	26734
R106	300R METAL FILM 1% 25ppm	52726
R107	220R METAL FILM 1% 25 ppm	52727
R108	1K	27346
R109	15K	28804
R110	1K2	26734
R111	A.O.T	
R112	A.O.T	
R113	510R	26738
R114	THERMISTOR KR221C 220 ITT	50786
	CAPACITORS	
C101	0·1µf 160V ELECT	2740
C102	0·1µf 160V ELECT	2740
	TRANSISTORS	
TR101	2N5400	29328
TR102	AF670	4015
	THYRISTORS	
CSR101	RCA 40654	52241

Fig. 10 Printed Circuit Board Component Schedule

continued overleaf

COMPONENTS ON P.C. BOARD ASSY Nº 60373		
REF	DESCRIPTION	PT Nº
	RESISTORS	
R101	1K2 6W WW	2579
R102	10R	28731
R103	220R	26743
R104	56R 6W WW	3121
R105	1K2	26734
R106	300R METAL FILM 1% 25 ppm	52726
R107	220R METAL FILM 1% 25 ppm	52727
R108	1K	27346
R109	15K	28804
R110	1K2	26734
R111	NOT USED	
R112	AOT	
R113	510R	26738
R114	THERMISTOR KR221C 220M ITT	50786
	CAPACITORS	
C101	0·1µf 160V ELECT	2740
C102	0·1µf 160V ELECT	2740
	TRANSISTORS	
TR101	2N5400	29328
TR102	A1670	4015
	THYRISTORS	
CSR101	RCA 40654	52241

COMPONENTS ON P.C. BOARD ASSY Nº 60363					
REF	DESCRIPTION	PT Nº	REF	DESCRIPTION	PT Nº
	RESISTORS			TRANSISTORS	
R1	1K	27346	TR1	BC107	26790
R2	2K2	26730	TR2	BC107	26790
R3	15R	28772	TR3	BC107	26790
R4	10K	28800	TR4	BFY50	28112
R5	820R	26736	TR5	BFY50	26112
R6	820R	26736	TR6	BFX29	50181
R7	56R	28777			
R8	100R	26747			
R9	1K2	26734		BRIDGE RECTIFIER	
R10	56R	28777	MR1	WO2	19725
R11	1K2	26734			
R12	100R	26747			
R13	10K	28800		DIODES	
R14	27R	28774	D1	NOT USED	
R15	2K2	26730	D2	IN4148	23802
R16	2K2	26730	D3	IN4148	23802
R17	4K7	26722	D4	IN4148	23802
R18	15K	28804	D5	IN4148	23802
R19	10K	28800	D6	IN4148	23802
R20	4K7	26722	D7	IN4003	23462
R21	1K	27346	D8	IN4003	23462
R22	THERMISTOR 1K ITT 269X1183D	52728	D9	BZY88 C3V3 ZENER	4034
R23	AOT		D10	BZY88 C8V2 ZENER	3798
R24	2K7	26728			
R25	1K	27346			
R26	1K	27346			
	CAPACITORS				
C1	150µf 25V ELECT	52729			
C2	2·7µf 40V ELECT	52730			
C3	22µf 40V ELECT	52732			
C4	15µf 10V ELECT	52731			

NOTE - ALL RESISTORS METAL OXIDE MR5 ± 2% UNLESS OTHERWISE STATED

ADJUST ON TEST RESISTOR PROCEDURE

R62 RESISTOR R62 TO BE ADJUSTED TO GIVE A POTENTIAL DIFFERENCE OF 1·7V ± 0·05V ACROSS RESISTOR R60

R67 RESISTOR R67 TO BE ADJUSTED TO GIVE A CURRENT OF 1mA ± 0·0025mA VIA CONNECTION 11 TO THE VOLTAGE PROGRAMME CHAIN (CONSTANT VOLTAGE MODE)

R71 RESISTOR R71 TO BE ADJUSTED TO GIVE A CURRENT OF 0·85mA ± 0·005mA VIA CONNECTION 14 TO THE CURRENT PROGRAMME CHAIN (CONSTANT CURRENT MODE)

R23 RESISTOR R23 TO BE ADJUSTED TO GIVE 7·5V ± 0·2V ACROSS THE SERIES POWER TRANSISTORS PLUS EMITTER RESISTORS WITH BRM UNIT AT FULL LOAD AND IN CONSTANT CURRENT MODE WITH A SHORT CIRCUIT ACROSS THE OUTPUT TERMINALS

FIVE YEAR GUARANTEE:

Labour & Materials: The guarantee covers all components and parts (with the exception of fuses) when returned to our factory, carriage paid.

Components for Customer Repairs: We will supply all components free, for customers who prefer to repair their own units, providing the components and Power Supply have been used within the specified ratings. Faulty components must be returned to us.

Published Specification: We guarantee the unit to meet the published specification for five years and will, in the event of this not being the case, repair units accordingly free of charge, carriage paid by the customer.

Transferable: Customer may transfer guarantee, if he resells the unit as new within his own equipment.

N.B. This guarantee covers all BRM units and is effective from date of despatch from our factory.

OUR SALES, SERVICE AND ENGINEERING DEPARTMENTS ARE READY TO ASSIST YOU AT ALL TIMES.

Service Department
Advance Electronics Limited
Raynham Road,
BISHOPS STORTFORD
Hertfordshire.

www.manualsplus.com
1001291

ADVANCE
ELECTRONICS
LIMITED